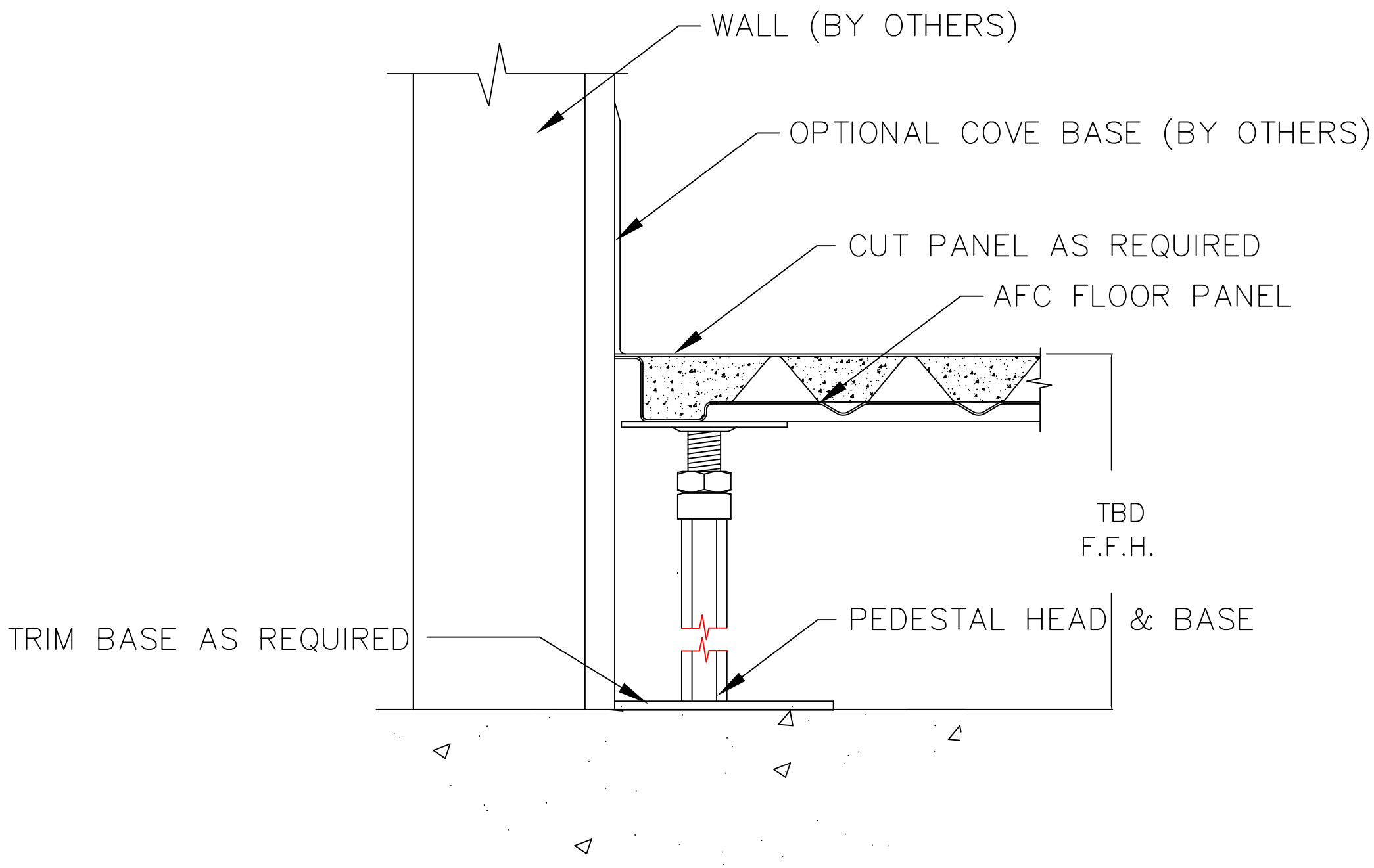

AF

ACCESS FLOOR @ WALL/COLUMN

N.T.S.

REV	DATE
R1	

Access Floor Corp
425-430-0600

ACCESS FLOOR
DETAIL DRAWINGS

Drawn By:
FMS

Date:
February 21, 2008

Scale:
NTS

Description:
Wall / Column Detail

Drawing No.
AF